## NOTES

FOR BERM WIDTH DIMENSIONS, SEE GENERAL DRAWING.

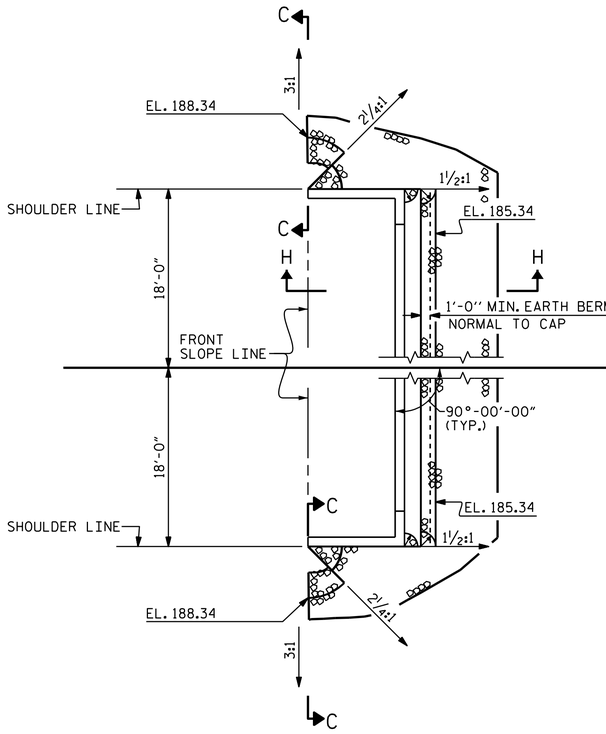


END BENT 1

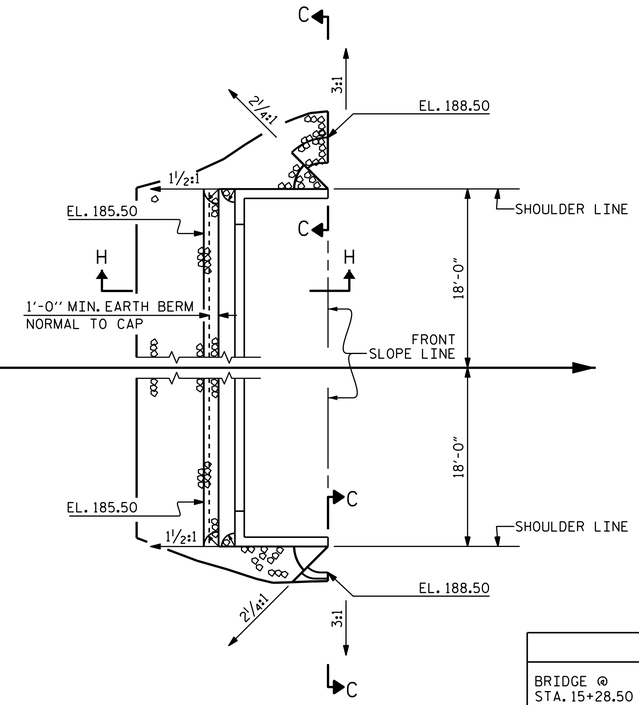


END BENT 2

| ESTIMATED QUANTITIES | | |
|---|---|---|
| BRIDGE @ STA. 15+28.50 -L- | RIP RAP CLASS II (2'-0" THICK) | GEOTEXTILE FOR DRAINAGE |
| | TONS | SQUARE YARDS |
| END BENT 1 | 90 | 100 |
| END BENT 2 | 90 | 100 |

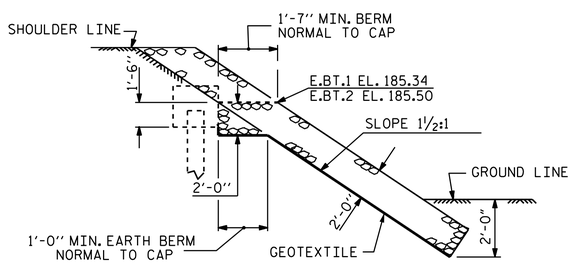


SECTION H-H

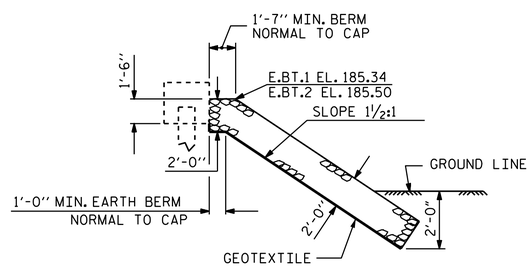


℄ SECTION
BERM RIP RAPPED

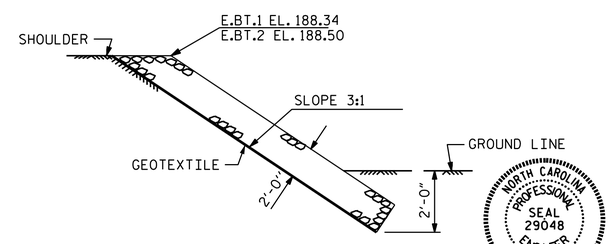


SECTION C-C

NORTH CAROLINA PROFESSIONAL SEAL 29048 ENGINEER RAMAN P. PATEL

DocuSigned by: Raman Patel 80F537B50A1F41D... 8/30/2016

PROJECT NO. B-5746
SCOTLAND COUNTY
STATION: 15+28.50 -L-

STATE OF NORTH CAROLINA
DEPARTMENT OF TRANSPORTATION
RALEIGH

STANDARD

RIP RAP DETAILS

| REVISIONS | | | | | | |
|---|---|---|---|---|---|---|
| NO. | BY: | DATE: | NO. | BY: | DATE: | |
| 1 | | | 3 | | | |
| 2 | | | 4 | | | |

SHEET NO. S-13
TOTAL SHEETS 14

DOCUMENT NOT CONSIDERED FINAL UNLESS ALL SIGNATURES COMPLETED

| | | |
|---|---|---|
| ASSEMBLED BY : D.A. DAVENPORT | DATE : 5/9/16 | |
| CHECKED BY : M. K. BEARD | DATE : 8/16/16 | |
| DRAWN BY : REK 1/84 | REV. 5/1/06R | TLA/GM |
| CHECKED BY : RDU 1/84 | REV. 10/1/11 | MAA/GM |
| | REV. 12/21/11 | MAA/GM |

29-AUG-2016 15:59
R:\Structures\Plans\B5746_SMU_RR.dgn
rppatel

STD. NO. RR1