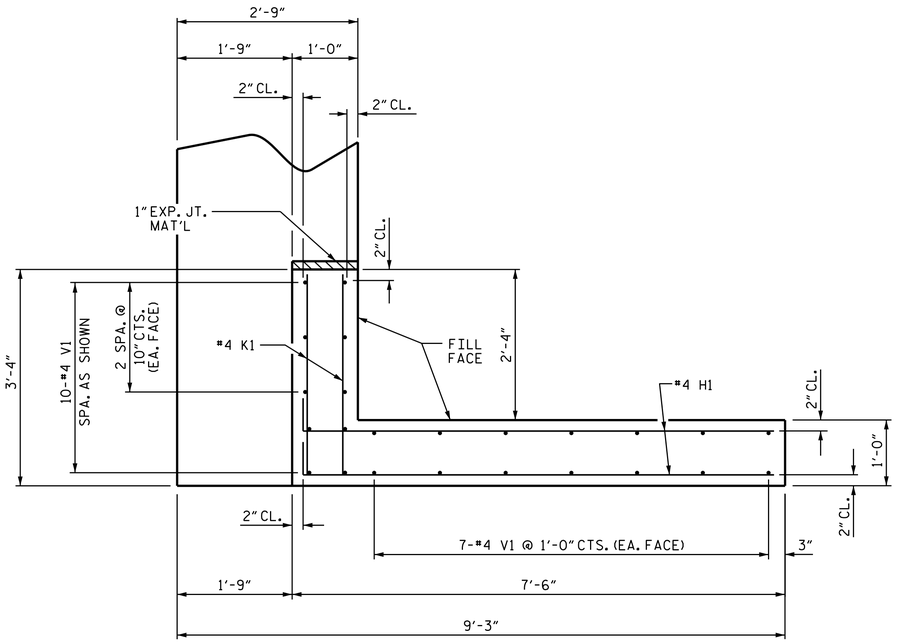

PLAN OF WING (W1)

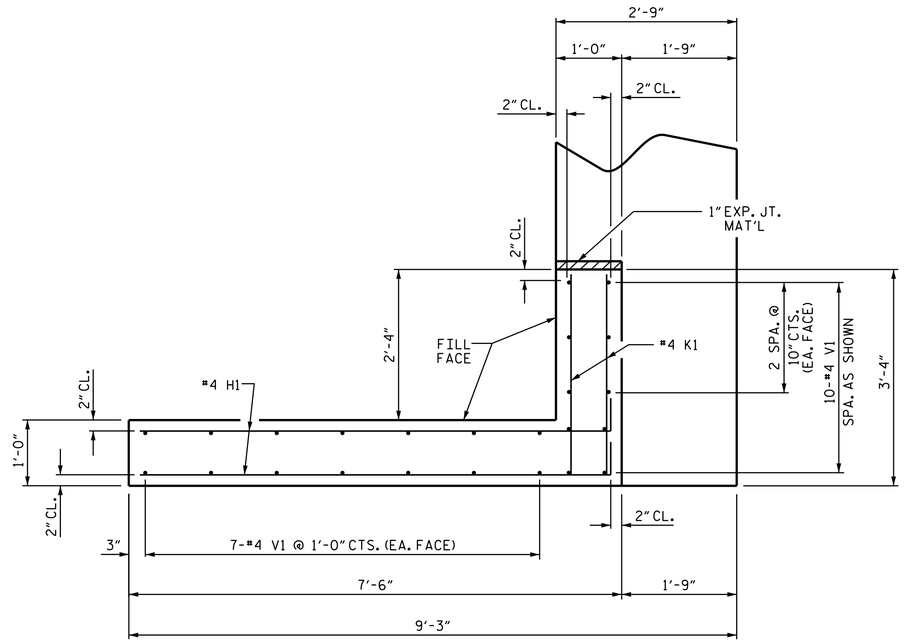

PLAN OF WING (W2)

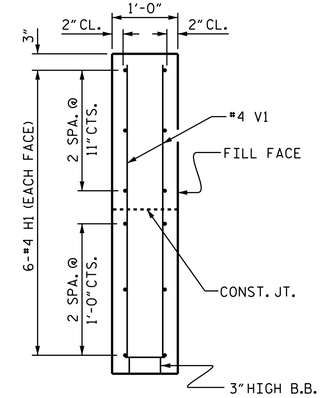

SECTION X-X

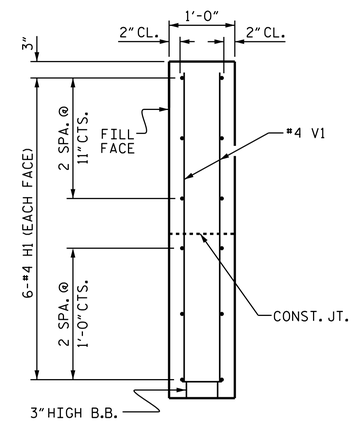

SECTION Y-Y

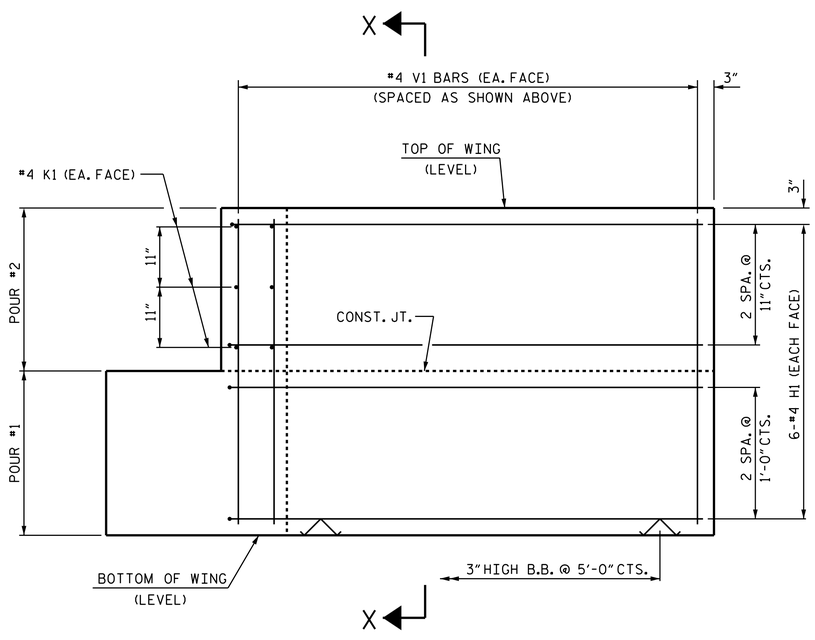

ELEVATION OF WING (W1)

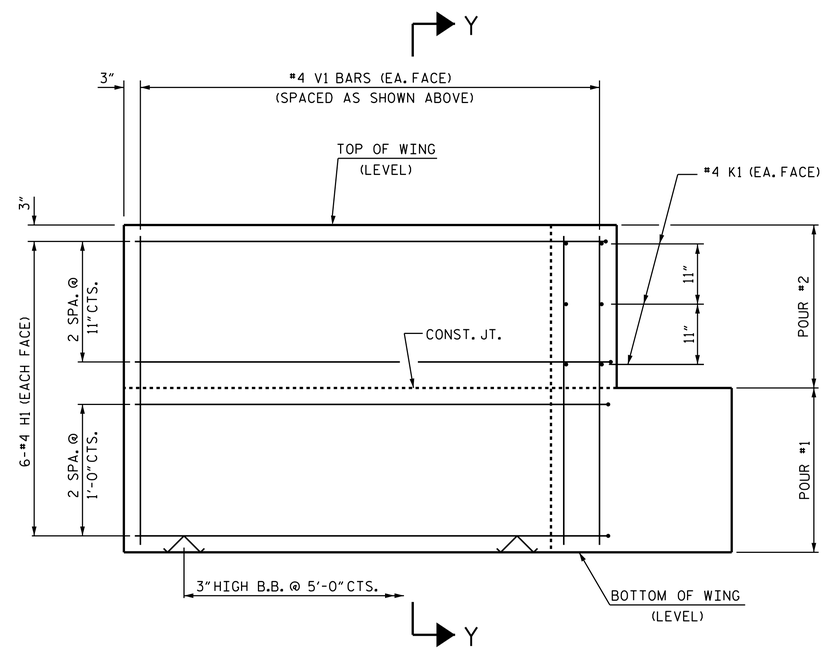

ELEVATION OF WING (W2)

WING DETAILS

PROJECT NO. B-5746

SCOTLAND COUNTY

STATION: 15+28.50 -L-

SHEET 3 OF 4

STATE OF NORTH CAROLINA
DEPARTMENT OF TRANSPORTATION
RALEIGH

SUBSTRUCTURE

END BENT
WING DETAILS

NORTH CAROLINA PROFESSIONAL SEAL 29048 ENGINEER RAMAN P. PATEL

DocuSigned by: Raman Patel 60F5378SDA1F41D... 8/30/2016

DOCUMENT NOT CONSIDERED FINAL UNLESS ALL SIGNATURES COMPLETED

REVISIONS						SHEET NO.
NO.	BY:	DATE:	NO.	BY:	DATE:	S-11
1			3			TOTAL SHEETS
2			4			14

ASSEMBLED BY : D.A. DAVENPORT	DATE : 5/6/16	
CHECKED BY : M. K. BEARD	DATE : 8/16/16	
DRAWN BY : DGE 02/10	REV. 4/15	MAA/TMG
CHECKED BY : MKT 02/10		

29-AUG-2016 15:59
R:\Structures\Plans\B5746_SMU_E*.dgn
rppatel

STD. NO. EB_30_90S