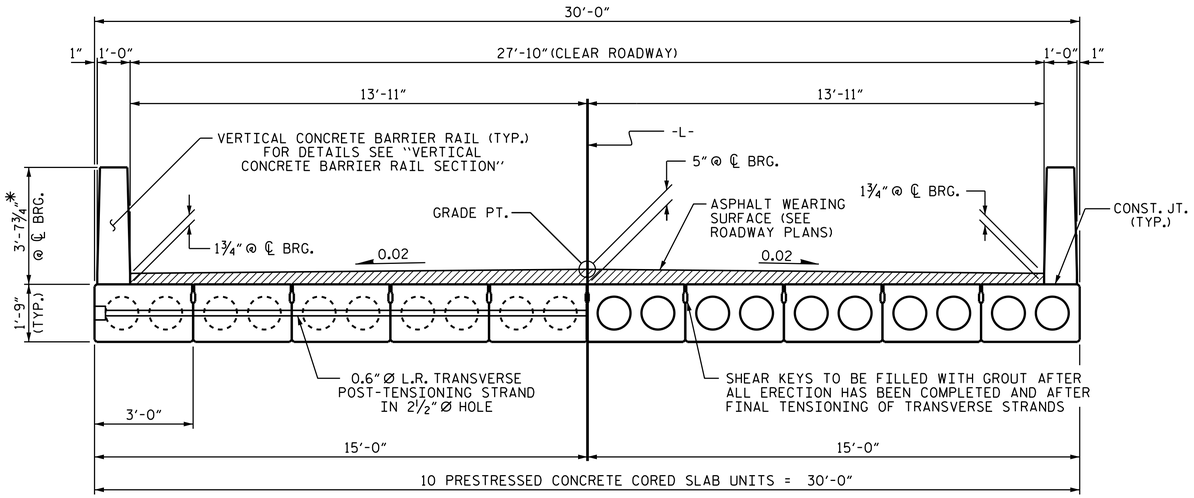


HALF SECTION
AT INTERMEDIATE DIAPHRAGMS

HALF SECTION
THROUGH VOIDS

## TYPICAL SECTION

* -THE BARRIER RAIL HEIGHT AND ASPHALT THICKNESS IS SHOWN AT THE CENTERLINE OF BEARING. DUE TO THE VERTICAL CURVE ALONG THE BRIDGE, THE MAXIMUM BARRIER RAIL HEIGHT AND ASPHALT THICKNESS DOES NOT OCCUR AT THE CENTERLINE OF THE BEARING. THE HEIGHT OF THE BARRIER RAIL AND ASPHALT THICKNESS VARIES WHILE THE TOP OF THE BARRIER RAIL FOLLOWS THE PROFILE OF THE GUTTERLINE. FOR RAIL HEIGHT DETAILS AND ASPHALT THICKNESS SEE THE "VERTICAL CONCRETE BARRIER RAIL SECTION" DETAIL.

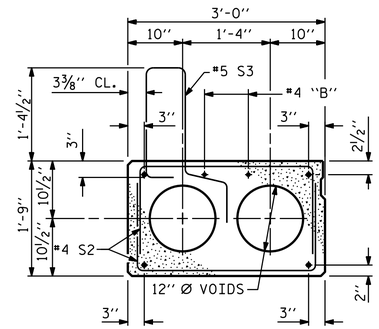


## EXT. SLAB SECTION

(FOR PRESTRESSED STRAND LAYOUT, SEE INTERIOR SLAB SECTION.)

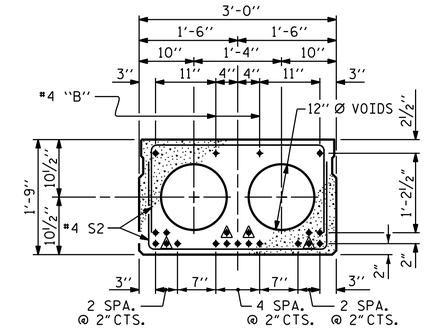


INTERIOR SLAB SECTION
(55' UNIT)
(19 STRANDS REQUIRED)

## 0.6" Ø LOW RELAXATION STRAND LAYOUT

BOND SHALL BE BROKEN ON THESE STRANDS FOR A DISTANCE OF 6'-0" FROM END OF CORED SLAB UNIT. SEE STANDARD SPECIFICATIONS, ARTICLE 1078-7.

## DEBONDING LEGEND

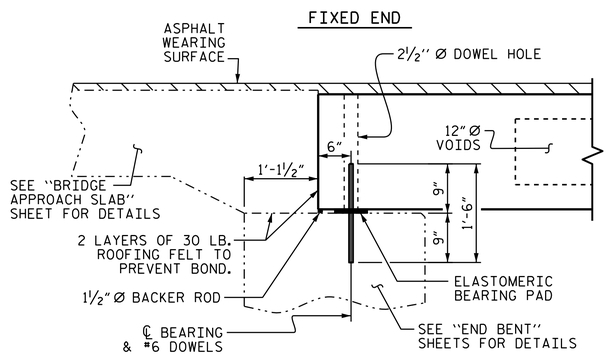


## SECTION AT END BENT

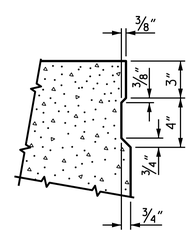


## SHEAR KEY DETAIL

NOTE: OMIT SHEAR KEY ON OUTSIDE FACE OF EXTERIOR CORED SLABS.

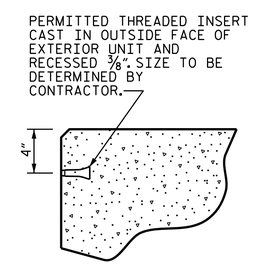


THREADED INSERT DETAIL

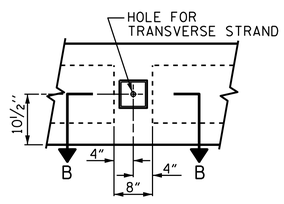


ELEVATION VIEW

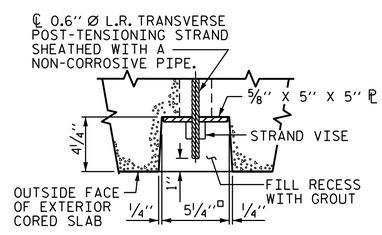


SECTION B-B

## GROUTED RECESS AT END OF POST-TENSIONED STRAND OF CORED SLABS

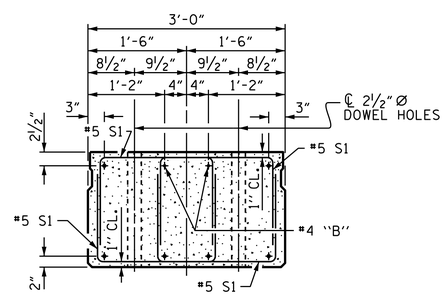


## END ELEVATION

SHOWING PLACEMENT OF DOUBLE STIRRUPS AND LOCATION OF DOWEL HOLES. (STRAND LAYOUT NOT SHOWN.) INTERIOR SLAB UNIT SHOWN-EXTERIOR SLAB UNIT SIMILAR EXCEPT SHEAR KEY LOCATION.

PROJECT NO. B-5746
SCOTLAND COUNTY
STATION: 15+28.50 -L-

SHEET 1 OF 3

STATE OF NORTH CAROLINA
DEPARTMENT OF TRANSPORTATION
RALEIGH

STANDARD
3'-0" X 1'-9"
PRESTRESSED CONCRETE
CORED SLAB UNIT
90° SKEW

NORTH CAROLINA PROFESSIONAL SEAL 29048 ENGINEER RAMAN P. PATEL

DocuSigned by: Raman Patel
60F537B5DA1E4D9...
8/30/2016

DOCUMENT NOT CONSIDERED FINAL UNLESS ALL SIGNATURES COMPLETED

| REVISIONS | | | | | | SHEET NO. |
|---|---|---|---|---|---|---|
| NO. | BY: | DATE: | NO. | BY: | DATE: | S-5 |
| 1 | | | 3 | | | TOTAL SHEETS |
| 2 | | | 4 | | | 14 |

| | |
|---|---|
| ASSEMBLED BY : D.A. DAVENPORT | DATE : 5/13/16 |
| CHECKED BY : M. K. BEARD | DATE : 8/16/16 |
| DRAWN BY : DGE 5/09 | REV. 8/14 MAA/TMG |
| CHECKED BY : BCH 6/09 | |

29-AUG-2016 15:59
R:\Structures\Plans\B5746_SMU_TS.dgn
rppatel

STD. NO. 21" PCS2_30_90S