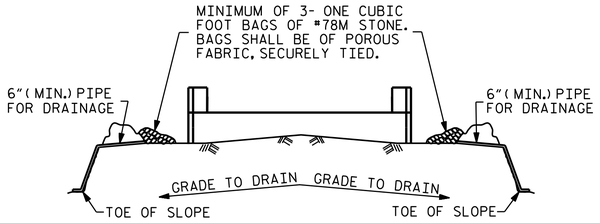

BAGGED STONE AND PIPE SHALL BE PLACED IMMEDIATELY AFTER COMPLETION OF END BENT EXCAVATION. PIPE MAY BE EITHER CONCRETE, CORRUGATED STEEL, CORRUGATED ALUMINUM ALLOY, OR CORRUGATED PLASTIC. PERFORATED PIPE WILL NOT BE ALLOWED.

BAGGED STONE SHALL REMAIN IN PLACE UNTIL THE ENGINEER DIRECTS THAT IT BE REMOVED. THE CONTRACTOR SHALL REMOVE AND DISPOSE OF SILT ACCUMULATIONS AT BAGGED STONE WHEN SO DIRECTED BY THE ENGINEER. BAGS SHALL BE REMOVED AND REPLACED WHENEVER THE ENGINEER DETERMINES THAT THEY HAVE DETERIORATED AND LOST THEIR EFFECTIVENESS.

NO SEPARATE PAYMENT WILL BE MADE FOR THIS WORK AND THE ENTIRE COST OF THIS WORK SHALL BE INCLUDED IN THE UNIT CONTRACT PRICE BID FOR THE SEVERAL PAY ITEMS.

TEMPORARY DRAINAGE AT END BENT

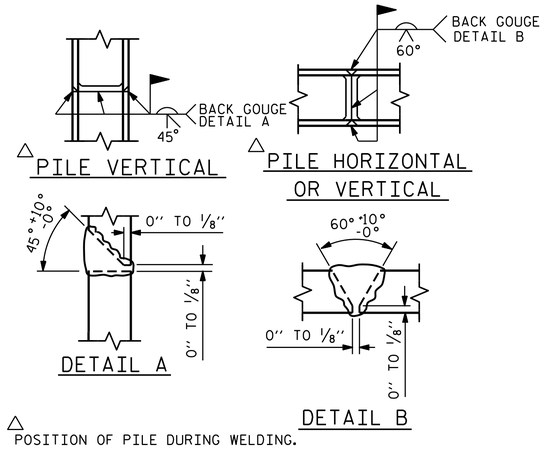

△ POSITION OF PILE DURING WELDING.

PILE SPLICE DETAILS

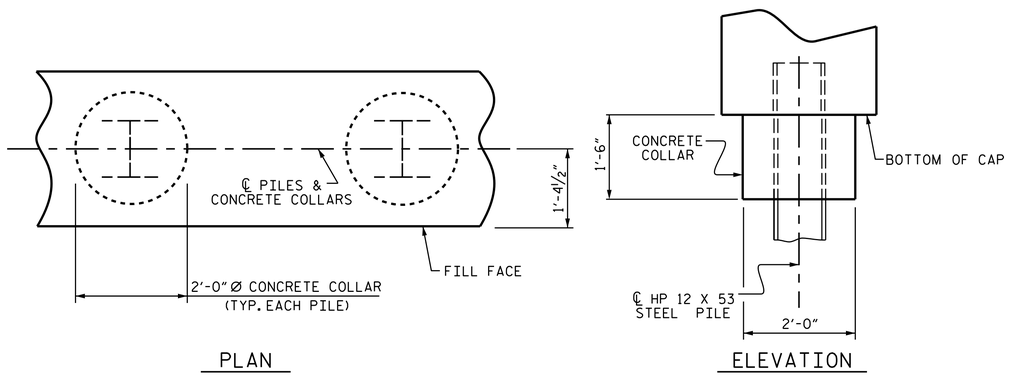

CORROSION PROTECTION FOR STEEL PILES DETAIL

(END BENT 1 SHOWN, END BENT 2 SIMILAR BY ROTATION)

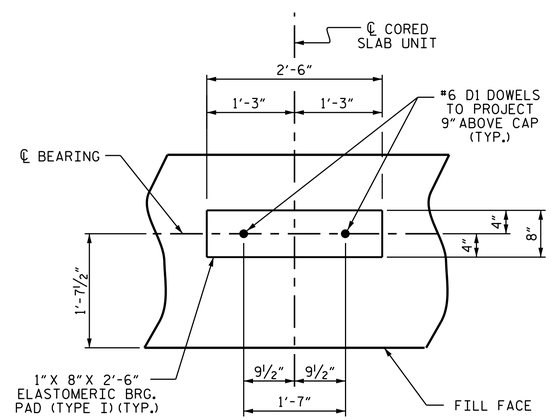

DETAIL "A"

(END BENT 1 SHOWN, END BENT 2 SIMILAR BY ROTATION)

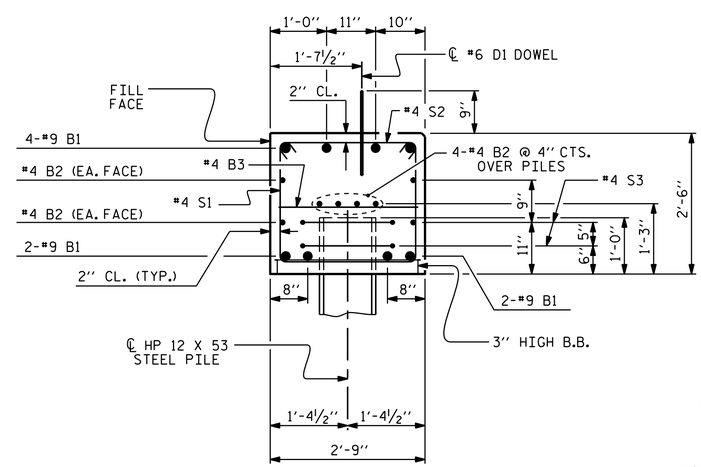

SECTION A-A

(CONCRETE COLLAR NOT SHOWN FOR CLARITY. SEE "CORROSION PROTECTION FOR STEEL PILES DETAIL.")

BAR TYPES

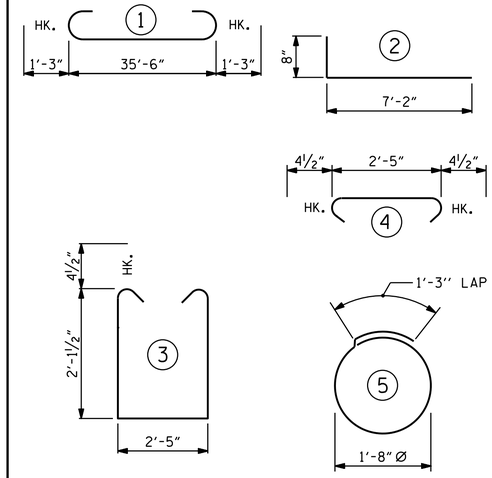

ALL BAR DIMENSIONS ARE OUT TO OUT.

END BENT 1		END BENT 2	
HP 12 X 53 STEEL PILES		HP 12 X 53 STEEL PILES	
NO: 5	LIN. FT. = 350	NO: 5	LIN. FT. = 350
PILE REDRIVES	EACH 5	PILE REDRIVES	EACH 5

BILL OF MATERIAL
FOR ONE END BENT

BAR	NO.	SIZE	TYPE	LENGTH	WEIGHT
B1	8	#9	1	38'-0"	1034
B2	16	#4	STR	19'-1"	204
B3	9	#4	STR	2'-5"	15
D1	20	#6	STR	1'-6"	45
H1	24	#4	2	7'-10"	126
K1	12	#4	STR	2'-11"	23
S1	46	#4	3	7'-5"	228
S2	46	#4	4	3'-2"	97
S3	10	#4	5	6'-6"	43
V1	48	#4	STR	4'-8"	150

REINFORCING STEEL (FOR ONE END BENT) 1965 LBS.

CLASS A CONCRETE BREAKDOWN (FOR ONE END BENT)

POUR #1	CAP, LOWER PART OF WINGS & COLLARS	11.2 C.Y.
POUR #2	UPPER PART OF WINGS	1.8 C.Y.
TOTAL CLASS A CONCRETE		13.0 C.Y.

PROJECT NO. B-5746
SCOTLAND COUNTY
STATION: 15+28.50 -L-

SHEET 4 OF 4

STATE OF NORTH CAROLINA
DEPARTMENT OF TRANSPORTATION
RALEIGH

SUBSTRUCTURE

END BENT 1 & 2 DETAILS

NORTH CAROLINA PROFESSIONAL SEAL 29048 ENGINEER RAMAN P. PATEL

DocuSigned by: Raman Patel 60F537B50A1F41D... 8/30/2016

DOCUMENT NOT CONSIDERED FINAL UNLESS ALL SIGNATURES COMPLETED

REVISIONS						
NO.	BY:	DATE:	NO.	BY:	DATE:	
1			3			
2			4			

SHEET NO. S-12
TOTAL SHEETS 14

ASSEMBLED BY : D.A. DAVENPORT	DATE : 5/6/16		
CHECKED BY : M. K. BEARD	DATE : 8/16/16		
DRAWN BY : DGE 12/09	REV. 11/14	MAA/TMG	
CHECKED BY : MKT 01/10			

29-AUG-2016 15:59
R:\Structures\Plans\B5746_SMU_E*.dgn
rppatel

STD. NO. EB_30_90S